406770-002

CONNECTION DIAGRAM
D-C MOTOR - STAB. SHUNT
DUAL VOLTAGE FIELD

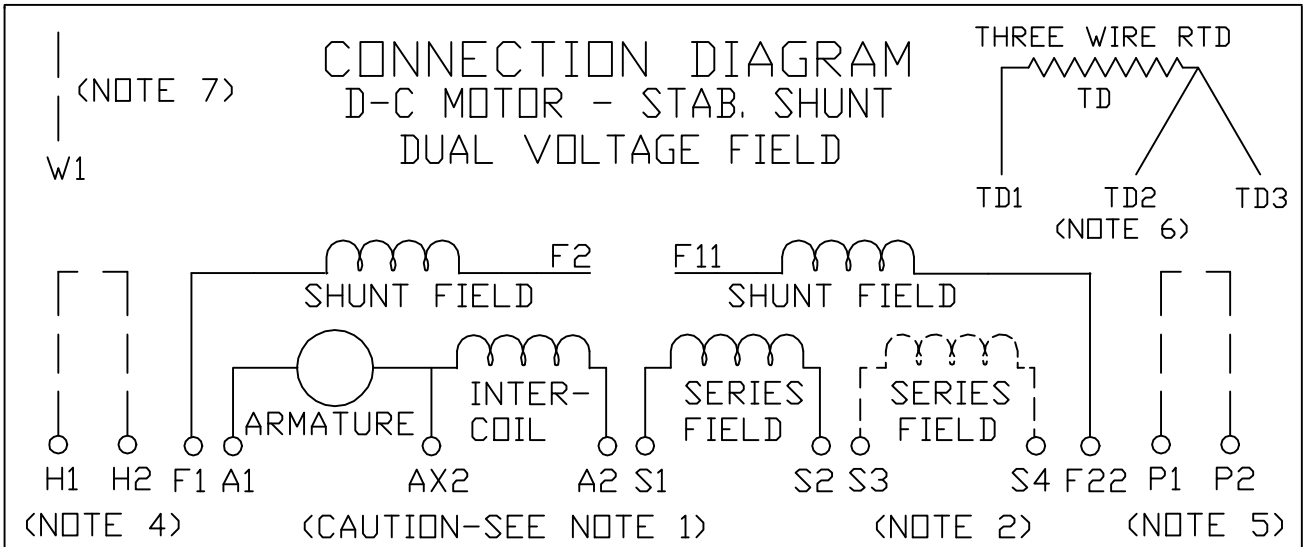

ARMATURE AND FIELD EXTERNAL CONNECTIONS
WARNING- SEE NOTE 8 FOR GROUNDING INSTRUCTIONS

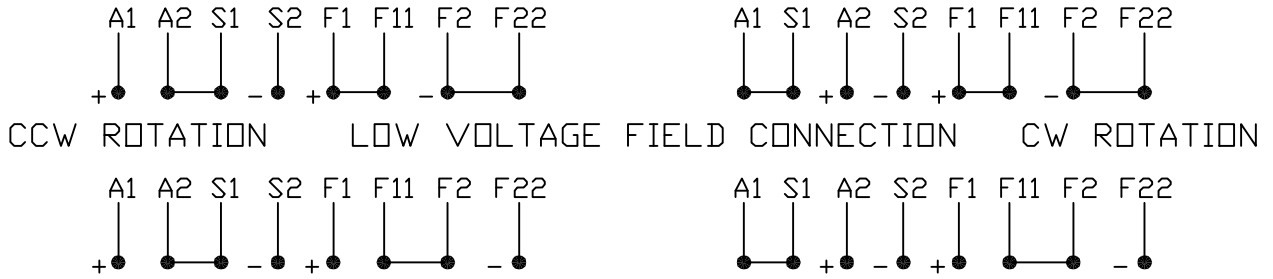

ROTATION FACING COMMUTATOR END

1. CAUTION — ARMATURE AND SERIES FIELD MAY HAVE MULTIPLE LEADS. CONNECT ALL LUGS WITH THE SAME MARKING TOGETHER.
2. OPTIONAL SERIES FIELD IS MARKED S3 AND S4. FOR CUMULATIVE SERIES FIELD, CONNECT S3 TO S2 AND CONNECT S4 TO NEGATIVE. FOR DIFFERENTIAL SERIES FIELD CONNECT S4 TO S2 AND S3 TO NEGATIVE.
3. OPTIONAL CONTROL SIGNAL LEAD IS MARKED AX2. ALWAYS TAKE INTERPOLE DROP BETWEEN A2 AND AX2. NOTE: NEMA DESIGNATION FOR AX2 IS LETTER C.
4. SPACE HEATERS, WHEN PROVIDED, WILL HAVE LEADS MARKED H1 AND H2, H3, H4, ETC.
5. THERMAL PROTECTOR, WHEN PROVIDED, WILL HAVE LEADS MARKED P1 AND P2, P3, P4, ETC.
6. WINDING RTD'S, WHEN PROVIDED, WILL HAVE LEADS MARKED TD1, TD2, &TD3.
7. BRUSH WEAR SENSOR, WHEN PROVIDED, WILL HAVE LEAD MARKED W1.
8. WARNING — MOTOR MUST BE GROUNDED TO PREVENT SERIOUS INJURIES TO PERSONNEL. GROUND THE MOTOR PER IEC, NATIONAL ELECTRICAL CODE AND ANY APPLICABLE LOCAL ELECTRICAL CODES. A TAPPED HOLE IS PROVIDED IN THE CONDUIT BOX, ON THE FOOT. FRAME BRACE OR OPPOSITE OPPOSITE DRIVE END BRACKET, ADJACENT TO THE TERMINAL BOX FOR FOR MOTOR GROUNDING. GROUND LEAD, WHEN PROVIDED, WILL BE GREEN.

CUSTOMER _____ CUSTOMER ORDER NO. _____ RELIANCE S.O. NO. _____

BALDOR

D-C MOTOR CONNECTION DIAGRAM STAB. SHUNT, DUAL VOLTAGE FIELD

SH 1 of 1

REV. DESC: UPDATE LOGO AND TITLEBLOCK: LOADED TO BUS
REV. LTR: -
VERSION: 00
TDR: 000000781086
REVISED: 02:35:07 02/01/2013
BY: MGHPC
FILE: \RSN\00026\434
MTL: -