Customer information packet

D50200RS-BV

200HP, 1750RPM, DC, 3612ATZ, DPG-FV,

Copyright © All product information within this document is subject to ABB Motors and Mechanical Inc. copyright © protection, unless otherwise noted.
10/6/2026 11:10:01 AM

Specifications

Enclosure	DP
Frame	LC3612ATZ
Frame Material	Exposed Laminations
Output Power	200.000 HP
Agency Approvals	CCSA US
Ambient Temperature	40 °C
Bearing Grease Type	Polyrex EM (-20F +300F)
Drip Cover	No Drip Cover
Feedback Device	NO FEEDBACK
Field Winding Type	STAB SHUNT
Frame Prefix	LC
Heater Indicator	No Heater
Lifting Lugs	Standard Lifting Lugs
Motor Standards	NEMA
Mounting Arrangement	F2
Overall Length	46.62 IN
Shaft Extension Location	Pulley End
Shaft Ground Indicator	No Shaft Grounding
Shaft Slinger Indicator	No Slinger

Part Detail

Revision	-
Type	DC
Mech. spec.	
Base	
Status	PRD/A
Elec. spec.	G7619A A
Layout	609972-049
Eff. date	04-13-2015
CD Diagram	406770-001
Poles	00
Leads	
Proprietary	False
Created date	04-09-2015

Nameplate

000613006LP							
CAT.NO.	D50200RS-BV	**SPEC NO.**	T36S1314				
FR	LC 3612ATZ	**HP**	200	**DUTY**	CONT		
ENCL.	DP	**RPM**	1750/ 2000	**S.F.**	1.0		
ENCL MOD	FORCE VENT	**VOLTS**	500	**INSUL**	F		
MAX SAFE SPEED	3400	**AMPS**	321.00	**AMB.**	40		
	FIELD DATA	**SER.NO.**					
WINDING	STAB SHUNT	**POWER CODE**	C				
VOLTS	300	**D.E. BRG.**	95BC02J30X				
MAX AMPS @ 25 C	5.41	**O.D.E. BRG.**	80BC02J30X				
HOT AMPS	3.91/ 3.29	**MIN. AMB.**	0	**TYPE**	TR		
	BRUSH:419904052AB; AIR BAFFLED						

609972-049

INDUSTRIAL DIRECT CURRENT MOTORS AND GENERATORS – RPM III

ENCLOSURE: DRIP-PROOF FULLY-GUARDED, SPLASHPROOF

MOUNTING:FOOT

COOLING: FORCE VENTILATED WITH INTEGRAL BLOWER AND MOTOR AIR FILTERED- SPECIAL BAFFLE

ACCESSORIES: PROVISION FOR TACHOMETER MOUNTING ONLY WHEN SPECIFIED

FRAMES SC3210ATZ THRU ULLC3612ATZ

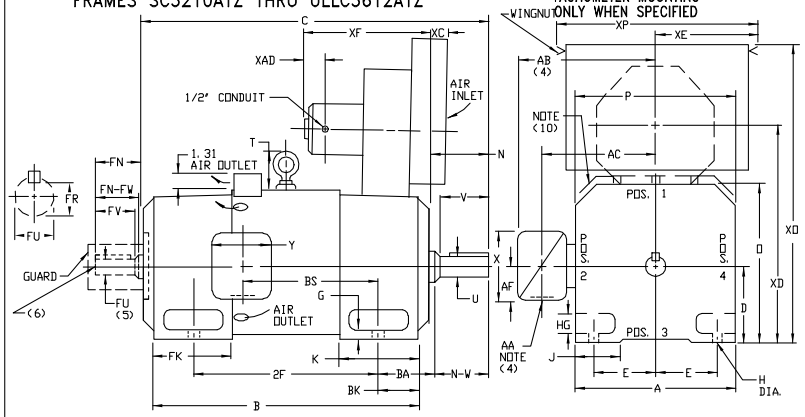

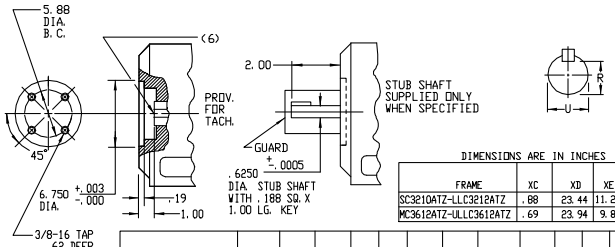

DIMENSIONS ARE IN INCHES

FRAME	XC	XD	XE	XF	XD	XP	XAD
SC3210ATZ-LLC3212ATZ	.88	23.44	11.25	17.69	38.63	22.50	3.06
MC3612ATZ-ULLC3612ATZ	.69	23.94	9.83	18.81	38.25	22.50	(11)

FRAME	A	D(1)	E	G	H	HG	J	D	P	T	BA	K	FK STD.	FK LG(8)	BK
SC3210ATZ-LLC3212ATZ	15.50	8.00	6.25	.75	.69	2.25	3.00	15.81	15.62	4.25	5.25	6.75	7.94	10.44	4.00
MC3612ATZ-ULLC3612ATZ	17.50	9.00	7.00	.88	.81	2.62	3.50	17.81	17.62	4.25	5.88	7.25	8.56	10.31	4.62

FRAME	METHOD OF DRIVE	C(7) STD.	C(7) LG(8)	B STD.	B LG(8)	BS	2F	DRIVE END SHAFT AND KEY N	N-W	U(2)	V	R(3)	SQ.	LGTH.	OPPOSITE DRIVE END SHAFT AND KEY (5) FN	FN-FW	FU(2)	FV	FR(3)	SQ.	LGTH.	WT. LBS.
SC3210ATZ- LSC3210ATZ	(9)	36.25	38.75	28.31	30.81	13.38	20.00	5.50	5.25	2.625	5.00	2.275	.625	4.00	4.75	4.50	2.250	4.25	1.972	500	3.25	1115
MC3212ATZ- LMC3212ATZ	(9)	39.25	41.75	31.31	33.81	16.38	25.00	5.50	5.25	2.625	5.00	2.275	.625	4.00	4.75	4.50	2.250	4.25	1.972	500	3.25	1210
LC3212ATZ- LLC3212ATZ	(9)	41.25	43.75	33.31	35.81	18.38	25.00	5.50	5.25	2.625	5.00	2.275	.625	4.00	4.75	4.50	2.250	4.25	1.972	500	3.25	1290
UMC3212ATZ-ULMC3212ATZ	BELTED	39.75	42.25	31.31	33.81	16.38	25.00	6.00	5.75	2.875	5.50	2.450	.750	4.25	4.75	4.50	2.250	4.25	1.972	500	3.25	1180
MC3612ATZ- LMC3612ATZ	COUPLED	42.88	44.62	34.44	36.19	18.12	28.00	6.00	5.75	2.875	5.50	2.450	.750	4.25	6.00	5.75	2.875	5.50	2.450	750	4.25	1685
UMC3612ATZ-ULMC3612ATZ	BELTED	43.62	45.38	34.44	36.19	18.12	28.00	6.75	6.50	3.250	6.25	2.831	.750	5.00	6.00	5.75	2.875	5.50	2.450	750	4.25	1695
LC3612ATZ- LLC3612ATZ	COUPLED	46.62	48.38	38.19	39.94	21.88	28.00	6.00	5.75	2.875	5.50	2.450	.750	4.25	6.00	5.75	2.875	5.50	2.450	750	4.25	1850
ULC3612ATZ-ULLC3612ATZ	BELTED	47.38	49.12	38.19	39.94	21.88	28.00	6.75	6.50	3.250	6.25	2.831	.750	5.00	6.00	5.75	2.875	5.50	2.450	750	4.25	1860

(1) "D" DIMENSION WILL NOT BE EXCEEDED. SHIMS UP .06 INCHES IN THICKNESS ARE USUALLY REQUIRED FOR COUPLED OR GEARED MACHINES.
(2) "U" AND "FU" VARY----+.000 -.001
(3) "R" AND "FR" VARY----+.000 -.015
(4) TERMINAL BOX VARIES WITH H.P. FOR DIMENSIONS "AA", "AB", "AC", "AF", "X" AND "Y", REFER TO BOX D/S. (STD. 609979-1, "X/P" 609979-2, MILL 609979-3)
(5) OPPOSITE DRIVE END SHAFT SUPPLIED ONLY WHEN SPECIFIED.
(6) MOTOR SHAFT TAPPED FOR SCREW IN STUB SHAFT.
(7) WHEN THE MOTOR APPLICATION DOES NOT REQUIRE THE USE OF DPP. DRIVE END, ADD .25 TO "C" DIM. FOR BRACKET COVER.
(8) DIMENSION FOR FRAMES WITH PREFIX LSC, LMC, LLC, ULMC, OR ULLC.
(9) METHOD OF DRIVE: COUPLED OR BELTED.
(10) FOR HORIZONTAL APPLICATIONS ONLY.
(11) "XAD" DIMENSION IS NOT APPLICABLE TO C360 FRAMES. (BLOWER MOTOR HAS CONDUIT BOX.)
TERMINAL BOX CAN BE ROTATED FOR LEAD OUTLET AT TOP, SIDES OR BOTTOM.
TERMINAL BOX LOCATED ON OPPOSITE SIDE WHEN F-2, W-1, W-4, W-5, W-7, OR C-1 MOUNTING IS SPECIFIED.
BOX LOCATED ON TOP WHEN SPECIFIED.
BLOWER ASSEMBLY CAN BE LOCATED AT POSITIONS 1, 2, OR 4
MOTOR WEIGHT MAY VARY 15% FOR NON-STANDARD RATINGS AND/OR ACCESSORIES.
IF MOUNTING CLEARANCE DETAILS ARE REQUIRED, CONSULT FACTORY.

CUSTOMER IS RESPONSIBLE FOR DETERMINING THAT BALDOR'S PRODUCT WILL PERFORM SUITABLY IN THE INTENDED APPLICATION.

REV. DESC: LOADED TO BUS		
REV. LTR: –	VERSION: 00	TDR: 000000577407
FILE: \RGG\00015\628	REVISED: 01:15:54 01/26/2011	BY: CONNAS
MTL: –		

BALDOR

DIMENSION DRAWING,SC3210ATZ – ULLC3612ATZ,DPP,FOOT MTG.

SH 1 of 1

609972-049

609979-001

INDUSTRIAL DIRECT CURRENT MOTORS AND GENERATORS - RPM III

STEEL AND CAST IRON TERMINAL BOX DIMENSIONS

STANDARD SIZE AND ONE SIZE LARGER

FRAMES C3210ATZ THRU C3613ATZ

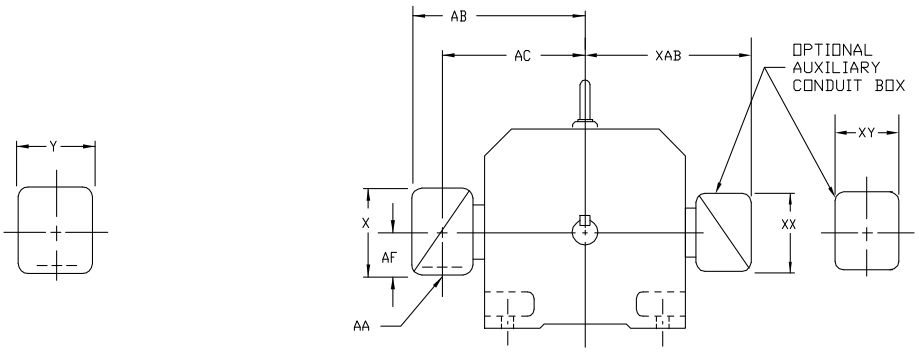

DIMENSIONS ARE IN INCHES

STEEL TERMINAL BOX DIMENSIONS

FRAME SIZE	MAX. AMPS	STANDARD SIZE AA(1)	AB	AC	AF	X	Y	PART NUMBER	ONE SIZE LARGER AA(1)	AB	AC	AF	X	Y	PART NUMBER
C3210ATZ C3212ATZ C3214ATZ	128	2	14.88	11.38	4.25	8.44	7.25	74874-R	3	15.31	12.06	4.25	8.44	7.25	74874-24-R
	185	3	15.31	12.06	4.25	8.44	7.25	74874-24-R	4	16.75	12.69	5.38	10.56	9.00	700308-3-R
	269	4	16.75	12.69	5.38	10.56	9.00	700308-3-R	5	21.00	15.88	6.50	12.10	14.62	702658-1-C
	500	5	21.00	15.88	6.50	12.10	14.62	702658-1-C	5	21.00	15.88	6.50	12.10	14.62	702658-1-C
C3612ATZ C3613ATZ	128	2	15.88	12.38	4.25	8.44	7.25	74874-R	3	16.31	13.06	4.25	8.44	7.25	74874-24-R
	185	3	16.31	13.06	4.25	8.44	7.25	74874-24-R	4	17.75	13.69	5.38	10.56	9.00	700308-3-R
	269	4	17.75	13.69	5.38	10.56	9.00	700308-3-R	5	22.00	15.88	6.50	12.10	14.62	702658-1-C
	500	5	22.00	15.88	6.50	12.10	14.62	702658-1-C	5	22.00	15.88	6.50	12.10	14.62	702658-1-C

CAST IRON TERMINAL BOX DIMENSIONS

FRAME SIZE	MAX. AMPS	STANDARD SIZE AA(2)	AB	AC	AF	X	Y	PART NUMBER	ONE SIZE LARGER AA(2)	AB	AC	AF	X	Y	PART NUMBER
C3210ATZ C3212ATZ C3214ATZ	128	1-1/2	13.62	11.19	3.00	6.00	7.00	75460-R	3	15.31	11.56	3.62	7.88	9.25	76700-RB
	185	3	15.31	11.56	3.62	7.88	9.25	76700-RB	4	16.62	12.44	4.12	9.50	10.50	76708-RR
	269	4	16.62	12.44	4.12	9.50	10.50	76708-RR	5	19.44	14.19	7.00	12.75	15.00	76870-S
	500	5	19.44	14.19	7.00	12.75	15.00	76870-S	6	19.44	14.19	7.00	12.75	15.00	76870-R
C3612ATZ C3613ATZ	128	1-1/2	14.62	12.19	3.00	6.00	7.00	75460-R	3	16.31	12.56	3.62	7.88	9.25	76700-RB
	185	3	16.31	12.56	3.62	7.88	9.25	76700-RB	4	17.62	13.44	4.12	9.50	10.50	76708-RR
	269	4	17.62	13.44	4.12	9.50	10.50	76708-RR	5	20.44	15.19	7.00	12.75	15.00	76870-S
	500	5	20.44	15.19	7.00	12.75	15.00	76870-S	6	20.44	15.19	7.00	12.75	15.00	76870-R

CONDUIT BOX DIMENSIONS WITH TERMINAL BOARDS (IEC TYPE BOX)

STANDARD SIZE

FRAME SIZE	AMPS	AB	AC	AF	X	AA (3)	Y	PART NUMBER
C320	400	19.02	15.28	6.20	14.39	---	14.39	706310-63-B
	800	19.02	15.28	6.20	14.39	---	14.39	706310-63-B
	1600	19.02	15.28	7.68	15.35	---	15.35	706310-63-C
C360	400	20.00	15.28	6.20	14.39	---	14.39	706310-63-B
	800	20.00	15.28	6.20	14.39	---	14.39	706310-63-B
	1600	20.00	15.28	7.68	15.35	---	15.35	706310-63-C

OPTIONAL AUXILIARY CONDUIT BOX DIMENSIONS (MAXIMUM)

FRAME SIZE	XAB	XX	XY	PART NUMBER	FRAME SIZE	XAB	XX	XY	PART NUMBER
C320	10.00	4.25	4.25	602007-26-A	C320	13.50	8.00	8.00	706310-3-B
C360	11.00	4.25	4.25	602007-26-A	C360	14.50	8.00	8.00	706310-3-B

(1) "AA" CONDUIT.
(2) "AA" PIPE TAP.
(3) CUSTOMER TO PROVIDE HOLE FOR CONDUIT.
TERMINAL BOX CAN BE ROTATED FOR LEAD OUTLET AT TOP, SIDES OR BOTTOM.
TERMINAL BOX LOCATED ON OPPOSITE SIDE WHEN F-2, W-1, W-4, W-5, W-7,
OR C-1 MOUNTING IS SPECIFIED. BOX LOCATED ON TOP WHEN SPECIFIED.
FOR "X/P" TERMINAL BOX DIMENSIONS SEE 609979-2.
FOR MILL TYPE TERMINAL BOX DIMENSIONS SEE 609979-3.

CUSTOMER IS RESPONSIBLE FOR DETERMINING THAT BALDOR'S PRODUCT WILL PERFORM SUITABLY IN THE INTENDED APPLICATION.

BALDOR

DIM SHT,C3210ATZ THRU C3613ATZ,W/AUX C/BOX
SH 1 of 1

REV. DESC: LOAD TO BUS
REV. LTR: -
FILE: \RGG\00026\318
MTL: -
VERSION: 00
REVISED: 08:37:45 12/17/2015
TDR: 000000958110
BY: RGGWT

609979-001

065564-004

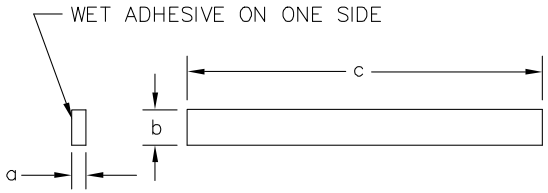

SYM	MAKE FROM 065564-004	a	b	c	REMARKS
A	X	1/8	5/8	24*	TERMBOX & CVR 180AT-250AT
B	X	1/8	5/8	37 1/2*	TERMBOX & CVR 280AT-320AT
C	Y	1/4	5/8	44 1/2△	FILTER TO HOUSING GASKET
D	X	1/8	5/8	170"	TEAO HEAT EXCH.
E	Y	1/4	5/8	72"△	TERMBOX & CVR

SYM	MAT'L SPEC	a	b	c
X	46024-XV	1/8	5/8	* 50' ROLL; WET ADHESIVE ON ONE SIDE
Y	46024-XV	1/4	5/8	* 50' ROLL; WET ADHESIVE ON ONE SIDE

△ RELIANCE WILL CUT AND MOUNT ON FILTER HOUSING PER ASSEMBLY DRAWING 603989-2.

* PROD. NOTE: WHEN ORDERING THRU PURCHASING ORDER AS 50 FT. ROLLS, WET ADHESIVE ON ONE SIDE. RELIANCE WILL CUT AND MOUNT ON COVER. PER INSTRUCTIONS ON COVER DRAWINGS.

065564-004

CUSTOMER IS RESPONSIBLE FOR DETERMINING THAT BALDOR'S PRODUCT WILL PERFORM SUITABLY IN THE INTENDED APPLICATION.

REV. DESC: CHANGE DESCRIPTION ON TITLE BLOCK			BALDOR
REV. LTR: C	VERSION: 03	TDR: 000000571980	
FILE: \RGG\00000\220	REVISED: 10:54:04 12/16/2010	BY: RGGWT	GASKET,STRIP,CLOSED CELL NEOPRENE
MTL: -			SH 1 of 1

406770-001

406770-001

CONNECTION DIAGRAM
D-C MOTOR - STAB. SHUNT

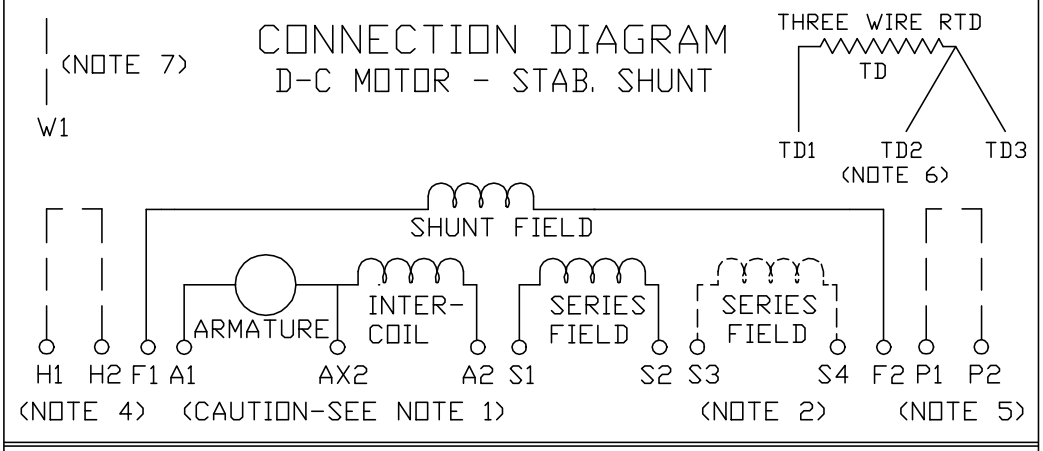

ARMATURE AND FIELD EXTERNAL CONNECTIONS
WARNING- SEE NOTE 8 FOR GROUNDING INSTRUCTIONS

ROTATION FACING COMMUTATOR END

1. CAUTION — ARMATURE AND SERIES FIELD MAY HAVE MULTIPLE LEADS. CONNECT ALL LUGS WITH THE SAME MARKING TOGETHER.
2. OPTIONAL SERIES FIELD IS MARKED S3 AND S4. FOR CUMULATIVE SERIES FIELD, CONNECT S3 TO S2 AND CONNECT S4 TO NEGATIVE. FOR DIFFERENTIAL SERIES FIELD CONNECT S4 TO S2 AND S3 TO NEGATIVE.
3. OPTIONAL CONTROL SIGNAL LEAD IS MARKED AX2. ALWAYS TAKE INTERPOLE DROP BETWEEN A2 AND AX2. NOTE: NEMA DESIGNATION FOR AX2 IS LETTER C.
4. SPACE HEATERS, WHEN PROVIDED, WILL HAVE LEADS MARKED H1 AND H2, H3, H4, ETC.
5. THERMAL PROTECTOR, WHEN PROVIDED, WILL HAVE LEADS MARKED P1 AND P2, P3, P4, ETC.
6. WINDING RTD'S, WHEN PROVIDED, WILL HAVE LEADS MARKED TD1, TD2, &TD3.
7. BRUSH WEAR SENSOR, WHEN PROVIDED, WILL HAVE LEAD MARKED W1.
8. WARNING — MOTOR MUST BE GROUNDED TO PREVENT SERIOUS INJURIES TO PERSONNEL. GROUND THE MOTOR PER IEC, NATIONAL ELECTRICAL CODE AND ANY APPLICABLE LOCAL ELECTRICAL CODES. A TAPPED HOLE IS PROVIDED IN THE CONDUIT BOX, ON THE FOOT. FRAME BRACE OR OPPOSITE DRIVE END BRACKET, ADJACENT TO THE TERMINAL BOX FOR MOTOR GROUNDING. GROUND LEAD, WHEN PROVIDED, WILL BE GREEN.

CUSTOMER _____ CUSTOMER ORDER NO. _____ RELIANCE S.O. NO. _____

BALDOR

D-C MOTOR CONNECTION DIAGRAM STAB. SHUNT
SH 1 of 1

REV. DESC: DELETED DUPLICATE WORDS FROM NOTE 8
REV. LTR: A | VERSION: 01 | TDR: 000000970330
FILE: \RSN\00026\422 | REVISED: 10:19:12 03/11/2016 | BY: RAGTBM
MTL: –