# Customer information packet

EMVM10116C-PP

M3BP 100LKG 6P B14 1.1KW

Copyright © All product information within this document is subject to ABB Motors and Mechanical Inc. copyright © protection, unless otherwise noted.
10/6/2026 9:04:30 PM

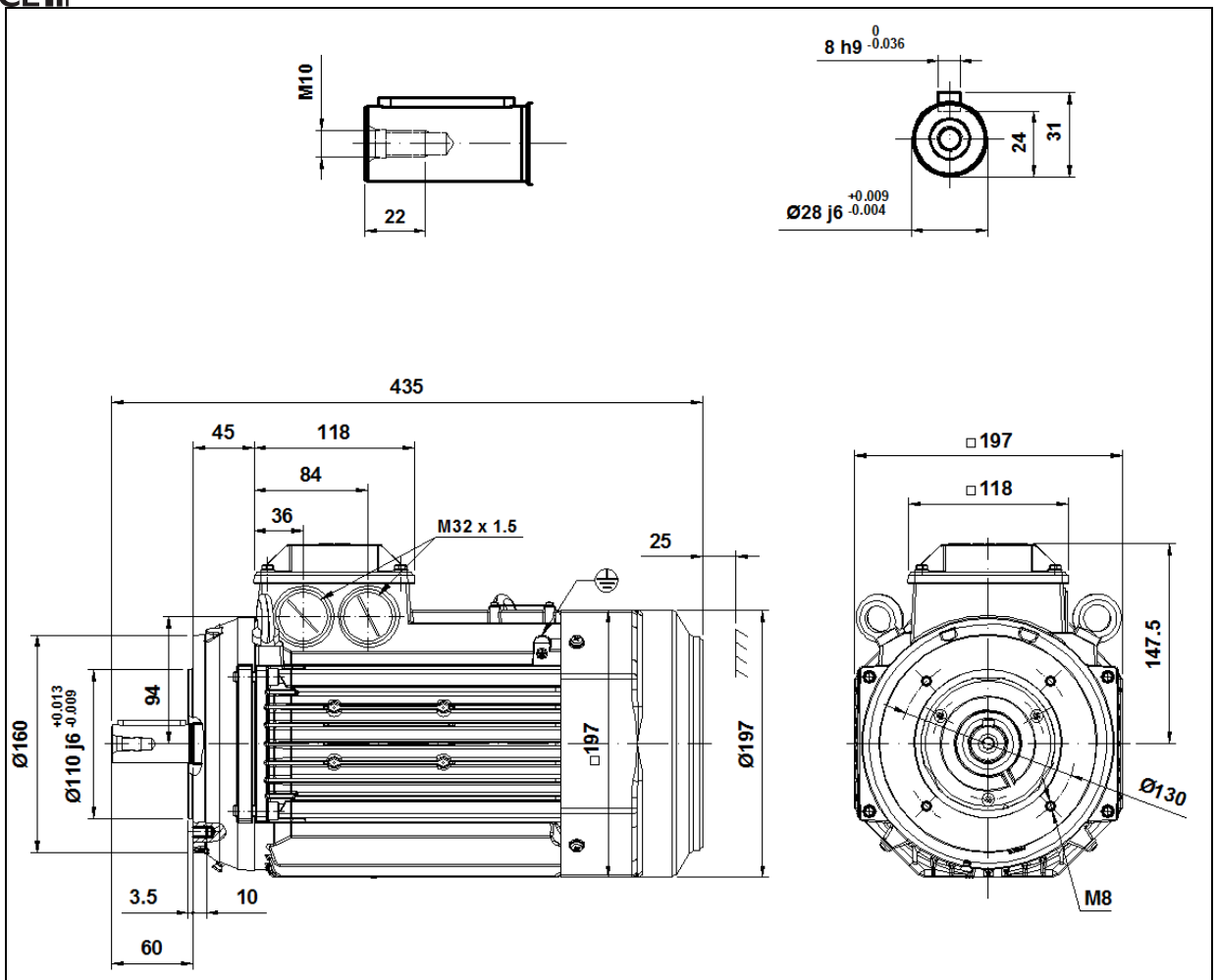


Additional information:

| | | |
|---|---|---|
| **Dimension Print** | Motor Type:<br>M3BP (K) 100LK 2-8 B14, V18, V19 FT130<br>M3GP (K) 100LK 2-8 B14, V19 FT130 | Document No:<br>3GZF500010-41 C<br>13 BP 100 A |
| Description: STANDARD IE3 SQUIRREL CAGE MOTOR WITH LONG FRAME | | |

| | | | |
|---|---|---|---|
| Unit: ABB Oy, Motors and Generators | | Issued by: J.Muñoz | Replaces: |
| Date: 09.03.2017 | | Approved by: E.Saenz | Replaced by: |
| **ABB Oy** | Customer Reference: | | ABB |