Customer information packet

EMVM16114D-PPN

M3BP 160MLA 4P B5 11KW

Copyright © All product information within this document is subject to ABB Motors and Mechanical Inc. copyright © protection, unless otherwise noted.
10/6/2026 9:04:49 PM

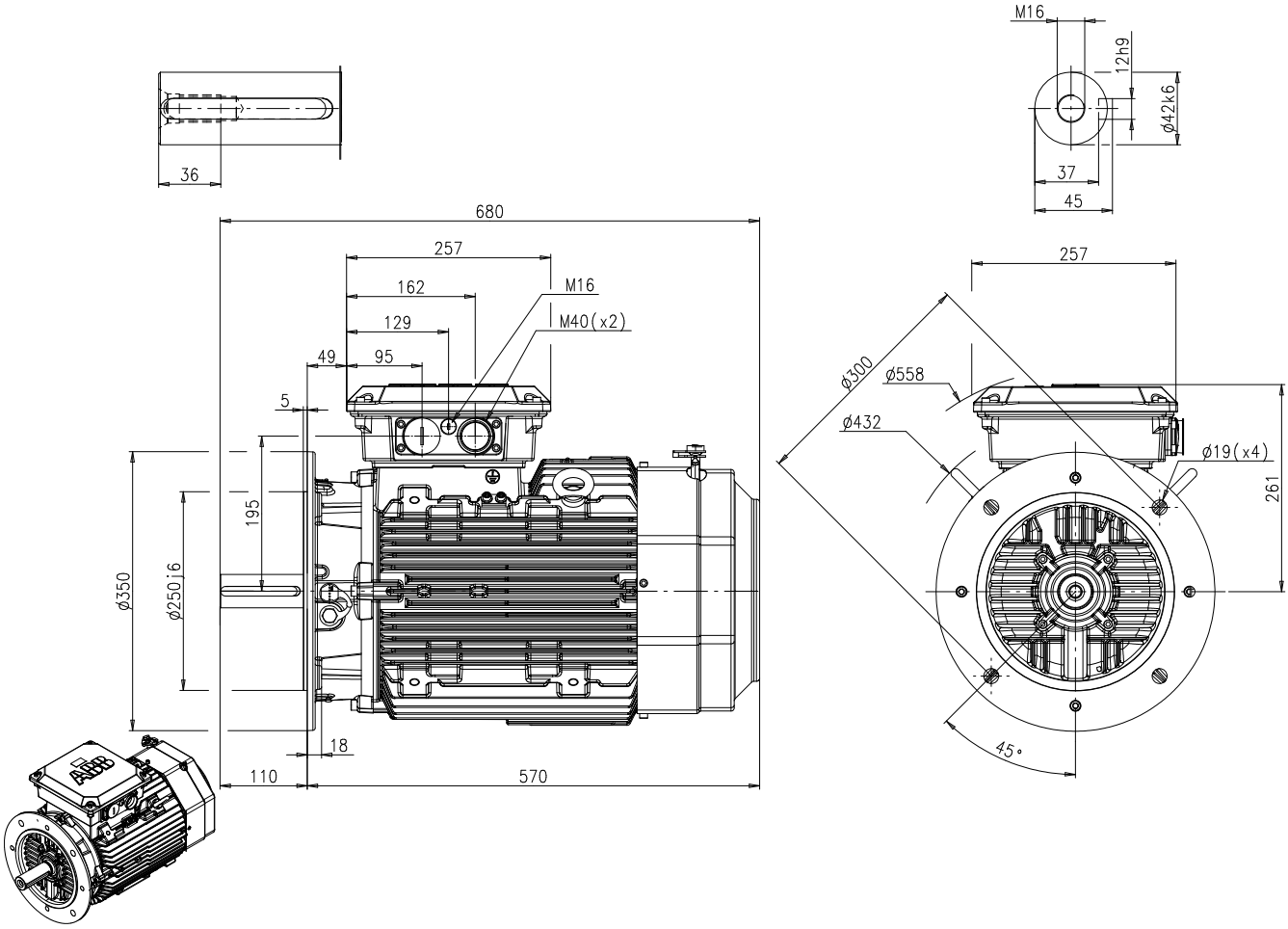

Motor Dimension Print	Motor Type: M4BP 160 long IM 3001	Document No: 3GZV 102 041-E A1.5205

Description: **Three phase motor,**

Unit:	ABB AB, LV Motors, Sweden.	Issued by: H Thorstenson	Replaces:
Date:	**2010-01-08**	Approved by: N Jonsson	Replaced by:
	Customer Reference:		