Customer information packet

MVM07372D-AP

M3AA 71 A 2P B5 .37KW

Copyright © All product information within this document is subject to ABB Motors and Mechanical Inc. copyright © protection, unless otherwise noted.
10/7/2026 12:46:17 AM

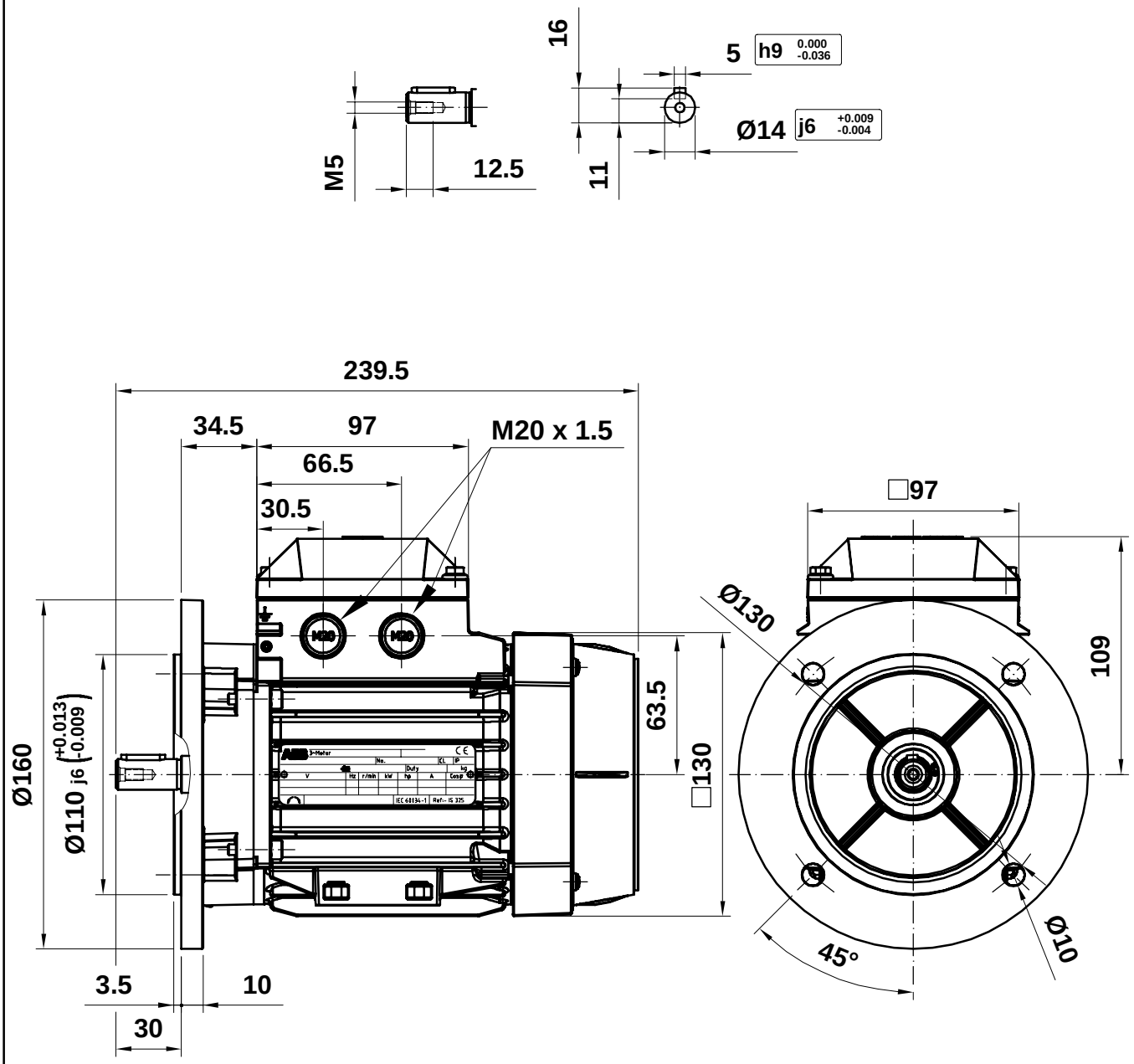

M3AA 071

Motor Dimension Print	Motor Type : M3AA 071	Document Nº : A1.5011 / 3D A2.5011

Description :

Motor flange mounted IM3001 / Motor con brida IM3001

Unit : Discrete Automation & Motion - Fáb. Motores	Issued by : ERM/J.L. Bayo	Replaces : 2010-12-03
Date : 2012-01-26	Approved by : ERM/G.Blanes	Replaced by :

Asea Brown Boveri, S.A.

Customer Reference :